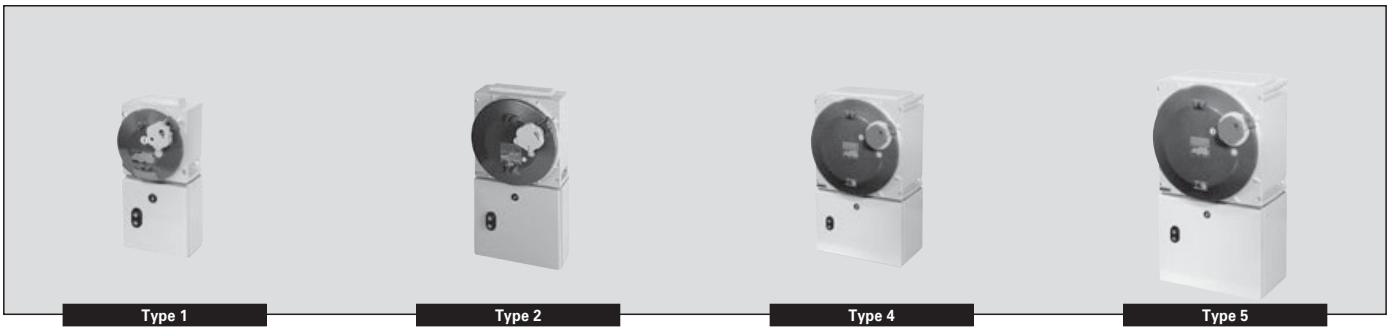

Technical data

Ex d Light alloy enclosure for motor starter	
Marking accd. to 94/9/EC	Ex II 2 G Ex de ia/ib [ia/ib] IIC/IIB T6/T5/T4 Gb Ex II 2 d Ex tb IIIC T80 °C T95 °C Db [1]
EC-Type Examination Certificate	PTB 99 ATEX 1057
IECEx-Certificate of Conformity	IECEx PTB 12.0026
Marking accd. to IECEx	Ex de IIC T6, T5, T4 Gb Ex de IIB T6, T5, T4 Gb
Permissible ambient temperature	–20 °C up to +40 °C –55 °C up to +55 °C (option)
Rated voltage	690 V
Rated current	630 A
Protection class	I
Connecting terminals	up to 300 mm²
Degree of protection acc. to EN 60529[1]	IP54 (IP66 on request)
Weight	see ordering details
Enclosure material	aluminium die-cast housing
Enclosure colour	pebbles grey, cover dark grey

[1] Dust certification only in combination with IP66

Ordering details

Content Motor capacity to AC 3	Type	Main switch	Cable glands	Weight approx.	Degree of protection nach EN 60529	Order No.
Direct circuit						
11 kW	1	25 A	3 x M25	14.5 kg	IP54	**EXKO 71 5000 F 0000**
15 kW	2	25 A	2 x M32 / 1 x M25	24.5 kg	IP54	**EXKO 71 5000 H 0000**
22 kW	4	40 A	2 x M40 / 1 x M25	37.5 kg	IP54	**EXKO 71 5000 K 0000**
Reversing circuit						
11 kW	1	25 A	3 x M25	14.5 kg	IP54	**EXKO 71 5100 F 0000**
15 kW	2	25 A	2 x M32 / 1 x M25	24.5 kg	IP54	**EXKO 71 5100 H 0000**
22 kW	4	40 A	2 x M40 / 1 x M25	39.5 kg	IP54	**EXKO 71 5100 K 0000**
Star-delta starter						
7.5 kW	2	40 A	4 x M25	25 kg	IP54	**EXKO 71 5200 B 0000**
12.5 kW	2	40 A	4 x M25	25 kg	IP54	**EXKO 71 5200 D 0000**
18.5 kW	4	40 A	3 x M32 / 1 x M25	37 kg	IP54	**EXKO 71 5200 F 0000**
30.0 kW	4	63 A	3 x M32 / 1 x M25	39 kg	IP54	**EXKO 71 5200 H 0000**
37.0 kW	5	100 A	1 x M40 / 2 x M32 1 x M25	64 kg	IP54	**EXKO 71 5200 K 0000**
55.0 kW	5	100 A	1 x M40 / 2 x M32 1 x M25	64 kg	IP54	**EXKO 71 5200 M 0000**

The motor starters are completely wired for connection by customer.
Further switching capacities up to 630 A on request.
Please state motor operating voltage and rated current in your order.

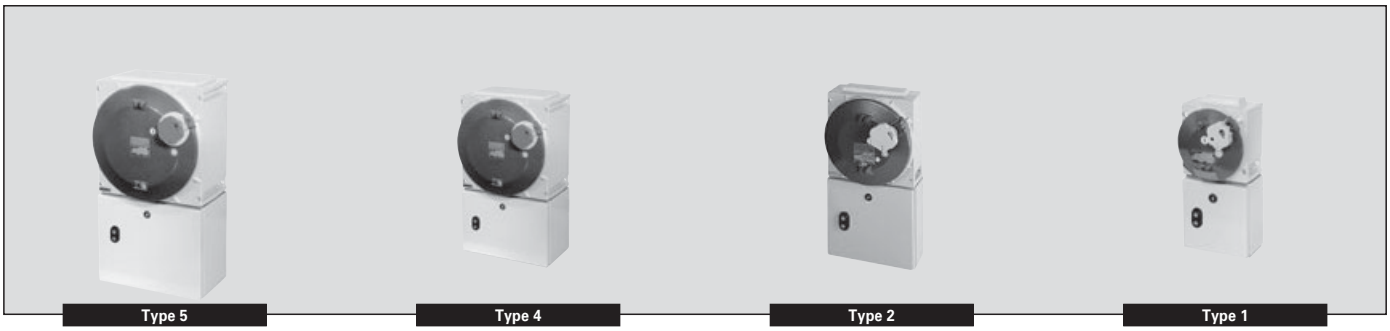

Dimension drawing | Wiring diagram

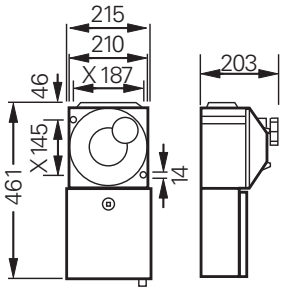

Type 1

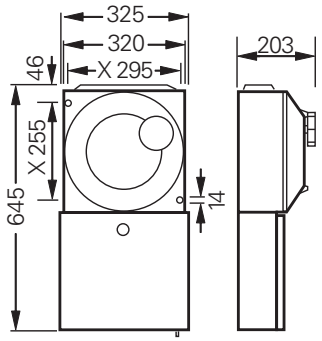

Type 2

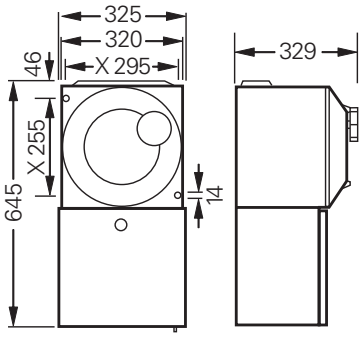

Type 4

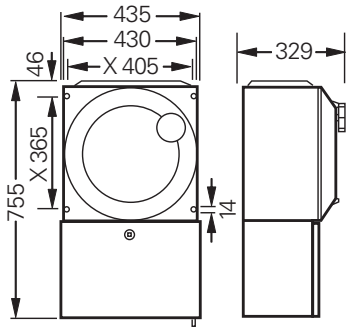

Type 5

X = fixing dimension

Direct online starter

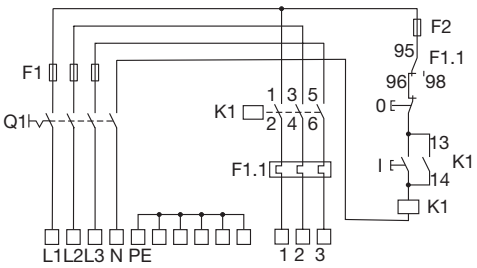

Reversing starter

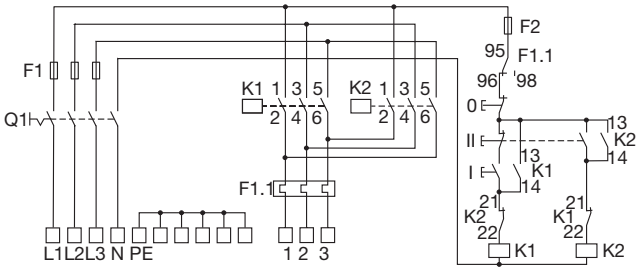

Star-delta starter

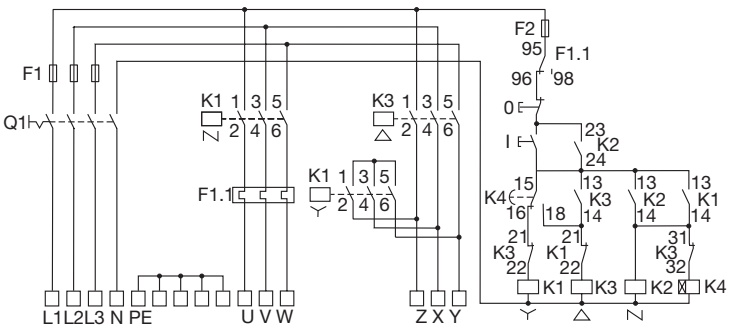

Dimensions in mm